TRICKLE-FILL SYSTEM

1,950 L vertical slimline

Slimline · 515 US gal · with the DAB Esybox Mini 3 pump



Specifications

Code	TF-VS500-EB3
Capacity	1,950 L (515 US gal)
Footprint	30½ × 58 in (77 × 147 cm)
Tank height	82 in (208 cm)
Height with vent	90 5/16 in (229 cm)
Pump outlet height	14½ in (37 cm)
Water weight when full	1,950 kg (4,300 lb)
Tank	HDPE, vertical slimline
Pump	DAB Esybox Mini 3
Power	120 V or 240 V

What is included

1. **HDPE storage tank**
   Polyethylene: does not rust or corrode.
2. **8 in lid**
   Hand-removable for inspection and cleaning.
3. **2 in vent**
   Lets the tank breathe. Can be piped outside.
4. **Float-operated fill valve**
   Closes as the water rises. No power, no sensor.
5. **1 in inlet with shut-off**
   Connects to the supply line. 3/4 in or 1/2 in on request.
6. **2 in overflow**
   Gravity line to a floor drain or outside.
7. **1 in pump feed with shut-off**
   Isolates the pump for service without draining the tank.
8. **DAB Esybox Mini 3**
   Variable-speed, constant-pressure pump, built-in VFD.

How it works

1

The supply fills the tank

Water enters through the float valve at whatever rate the supply can give.

2

Full tank, valve closed

The float lifts and shuts the valve mechanically. Nothing to program.

3

Open a tap, the pump wakes

The pump senses demand and draws from the tank, not the supply line.

4

Overflow to drain

If the tank ever overfills, the 2 in overflow carries the excess away by gravity.

Dimensions

Slimline · 1,950 L · dimensions on the drawing are in inches · the three views share one scale

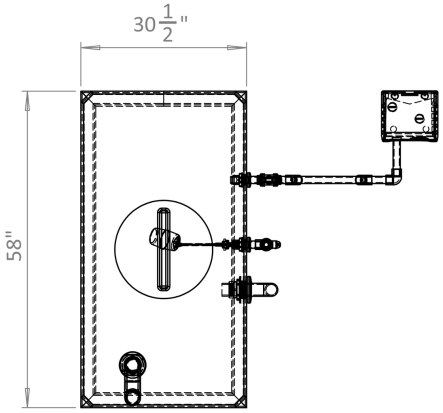

TOP VIEW

Key dimensions

Footprint	30½ × 58 in (77 × 147 cm)
Tank height	82 in (208 cm)
Overall height, with vent	90 5/16 in (229 cm)
Pump outlet height	14½ in (37 cm)
Tank to pump, as drawn	27 5/8 in (70 cm)

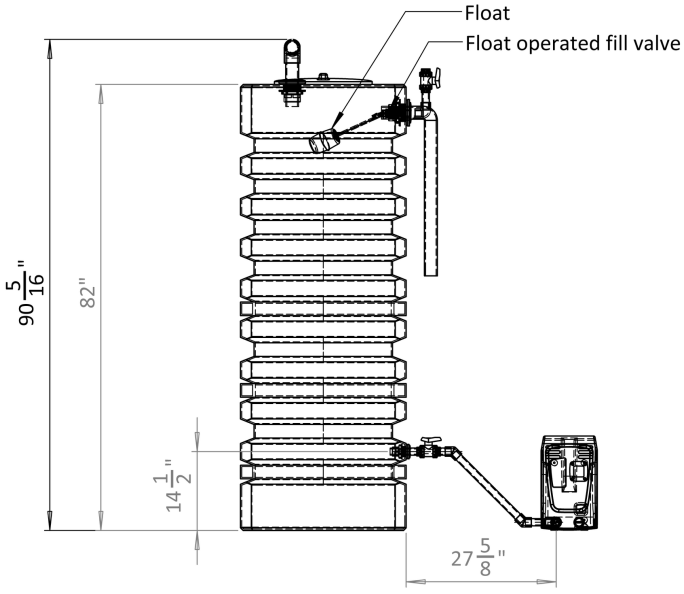

FRONT VIEW

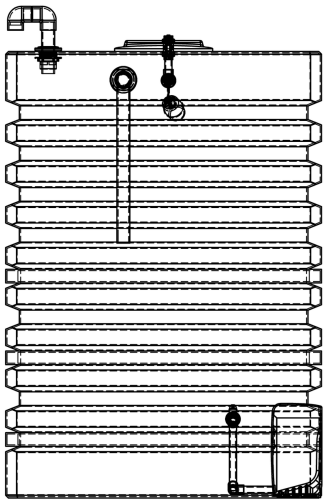

RIGHT SIDE VIEW

Good to know

- It stores and pressurizes water. It does not treat it.
- It needs a drain for the overflow and a 120 V or 240 V supply for the pump.
- Your existing supply stays, and now fills the tank through the float valve.
- Everything on the tank ships fitted. The installer supplies the connecting pipe.

Dimensions and capacities are nominal. Drawn by Cleanflo Water Technologies Inc.
Installation and operation manual, and the sheets for the other sizes: rainwatercollectionsupply.ca/product/trickle-fill-system